Dual Light Pod

P-IV-D-GL80

Contents

1 Introduction.....1

2 Product Structure and Electrical Interface.....1

2.1 Size of Product.....1

2.2 Electrical Interface.....2

2.3 Connection diagram.....3

3 Product and accessories.....4

4 Operation instruction of software.....5

4.1 Home.....5

4.2 Operating process.....5

5 Precautions.....8

Dual Light Pod Manual

1 Introduction

Model of ZX-P-IV-D-GL80 , the pod uses 10X optical zoom camera and un-cooled infrared camera, and achieves high definition image quality, excellent auto-focus performance as well as function of target tracking. With the two-axis and two-frame system, the product arrives at higher precision in image stabilization and no over-top dead zone. The pod is small in size, light in weight and low in power consumption. It can be used on different types of civil UAVs such as fixed wing, single rotor and multi-rotor for a wide variety of applications such as investigation, anti-terrorism, surveillance and pipeline inspection etc.

2 Product Structure and Electrical Interface

2.1 Size of Product

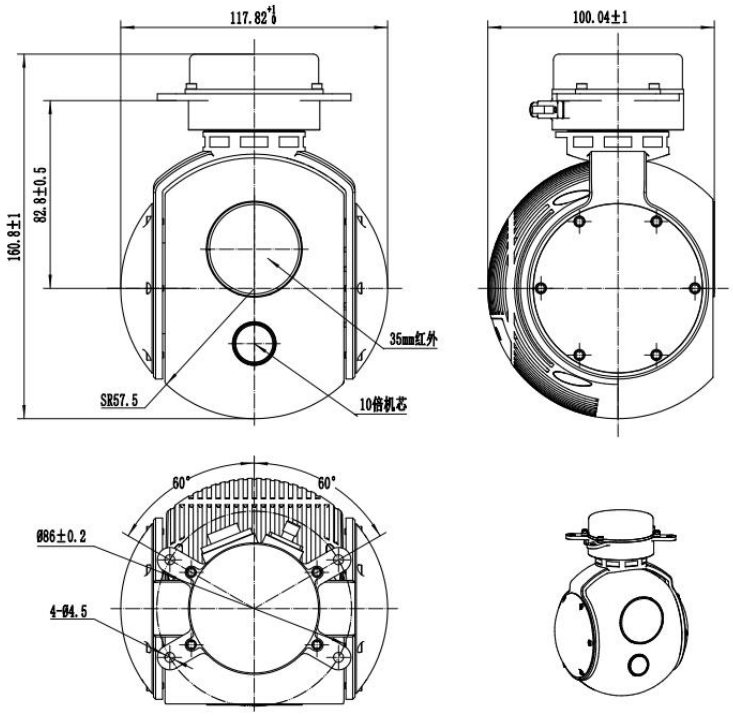

2.2 Electrical Interface

2.2.1 External Interface

1) Power interface: 10-16V;

2) 1 way RS232, asynchronous serial interface, 8 data bits, 1stop bit, no parity, baud rate 115200bps;

3) Network/Synchronization 422 compressed video interface;

4) Default card1.

2.2.2 Interface Definition

J30-15 connection interface definition

No.	Interface	Remarks
1	VCC	10V~16V
2	VCC	
3	GND	
4	GND	
5	RS232-TX1	Control serial port
6	RS232-RX1	
7	RS232-TX2	Backup serial port
8	RS232-RX2	
9	D1-P/Clk-P	Network port and synchronization 422 interface (optional)
10	D1-N/Clk-N	
11	D0-P/Data-P	
12	D0-N/Data-N	
13	SBUS-5V	Debugging SBUS
14	SBUS-RX	
15	GND	

2.3 Connection diagram

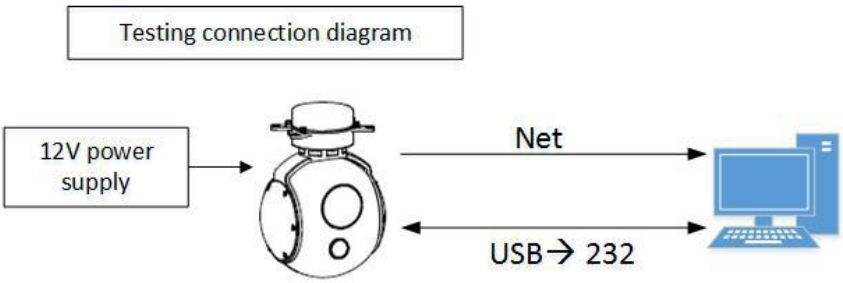

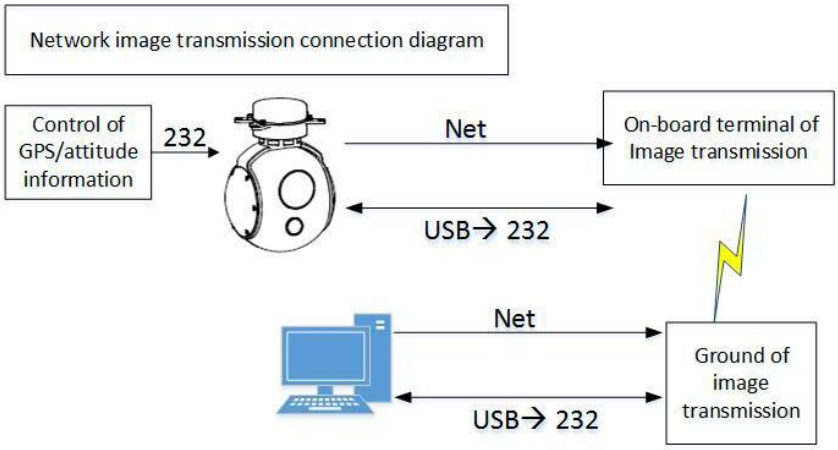

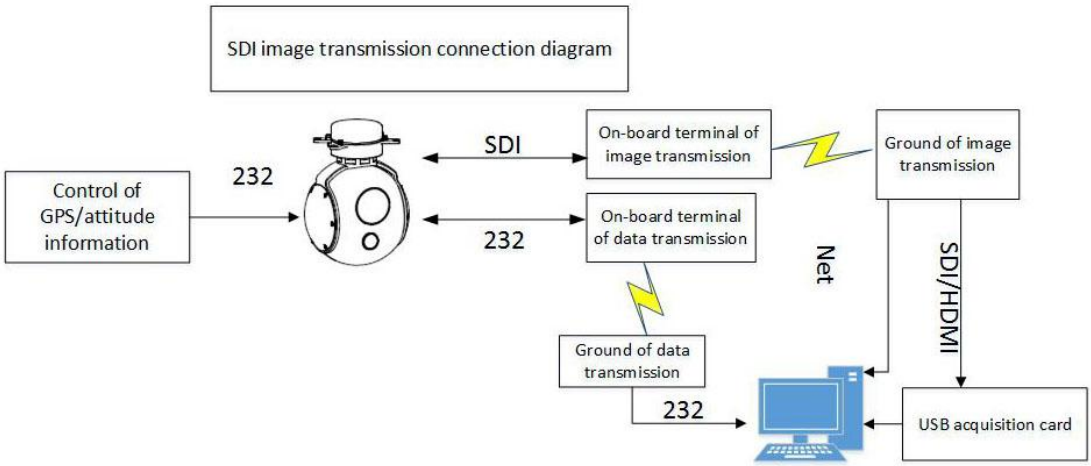

3 Product and accessories

1）ZX-P-IV-D-GL80 Pod: 1 set;

2）J30-15 connecting line: 1 piece.

ZX-P-IV-D-GL pod + video processing module×1
J30-15 connecting line×1
Please plug in the power finally to prevent damage to the machine. Please pay special attention to the position of the socket pins.

4 Operation instruction of software

4.1 Home

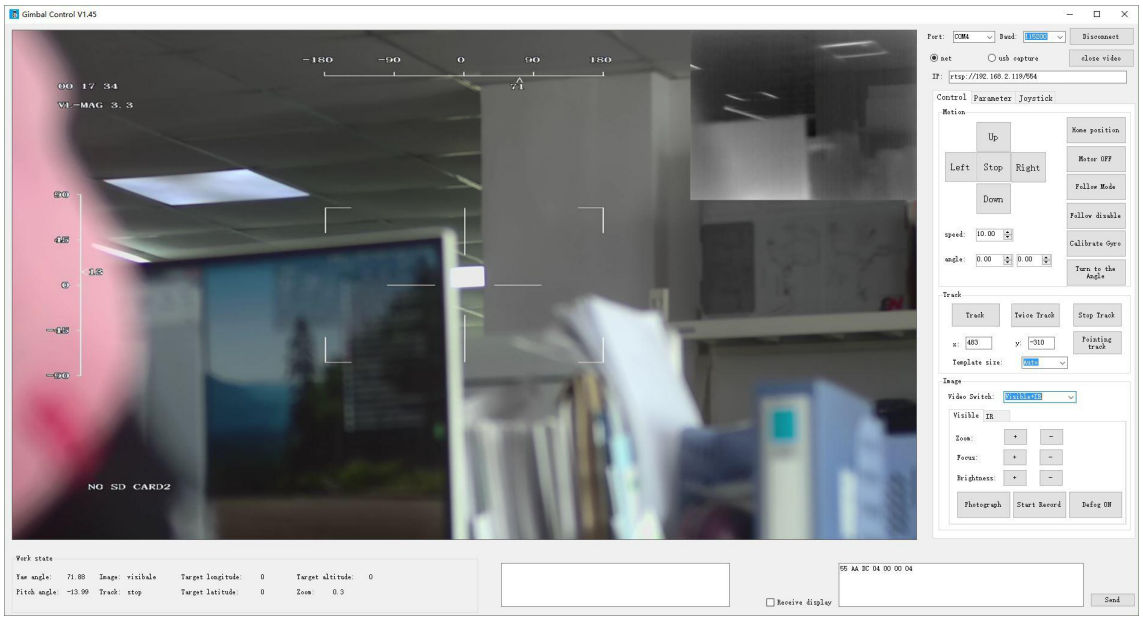

4.2 Operating process

Power on
1. Connect the video source and control serial port to the computer; 2.Open the software. 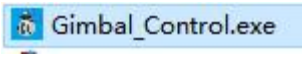
Confirm port number and network port settings
Right click on the computer, select computer property as shown on the right; Under normal circumstances, the selected serial port number is the refreshed serial port number after the connection is inserted. 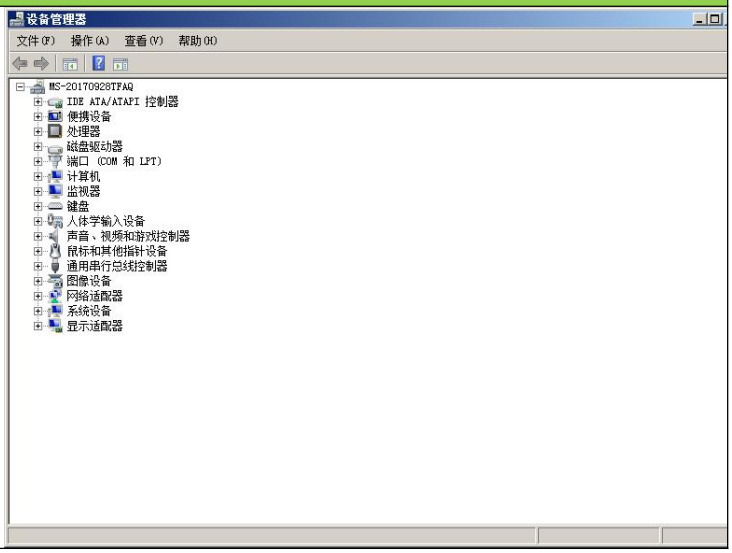

Double click the port(COM and LPT),the refreshed USB port is which need to be selected.	
Click drop-down list of serial port, select the right serial port number(status: turned on;the connection is correct) Choose the video source: 1. If you access the video through USB capture card, you can select the USB video, skip the next step and open the video directly. 2.If you access the video through the network port, please follow the next step.	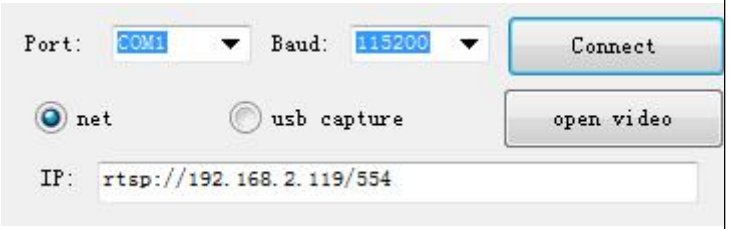
1. Click the button of “network video”; 2. Open the “control panel”and then “network and sharing center”; 3. Click the icon of “local connection”→“Property”,double click “Internet protocol version 4(TCP/IPv4)”; 4. Set the IP address to be on the same network as the video stream; the address is ： rstp://192.168.2.119/554; 5. Click the button of “open the video”,the video are shown on the right.	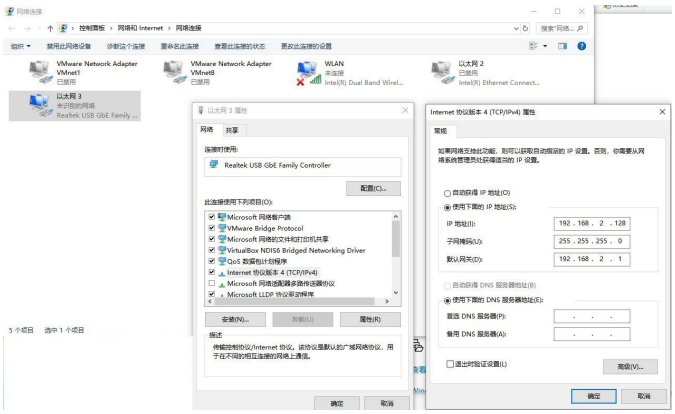
Common control of the pod	
Control the rotation direction of the pod through the button of up/down/left/right on the interface; Select the rotation speed of the pod through the speed bar; Home position: the pod is reset; Motor Off: the switch of controlling the motor; Follow Mode: the azimuth axis of the pod rotates with the aircraft; Follow disable: the azimuth axis of the pod stop rotating with the aircraft; Turn to the angle: set the pod to rotate to the specified angle.	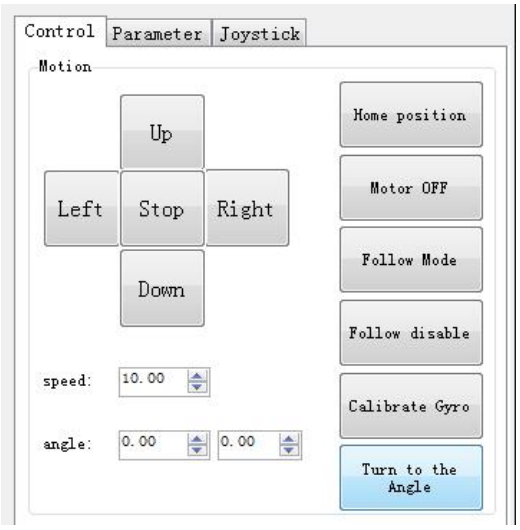

Track: double-click the left button of the mouse in the video stream to select the tracking target to realize the function, click the “stop track”button to cancel tracking; Click the “track”button to center the cross cursor; Template size: the size of the tracking frame template can be adjusted by the template size.	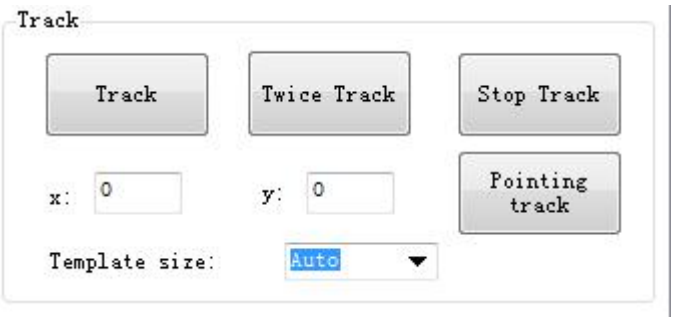
Image display settings: There are four display modes: IR, visible, and two switchable modes of “visible+IR”. Zoom, focus, and brightness settings can be made for visible and IR camera respectively. Supports for picture storing(Photograph), video recording(Start Record) and defogging(Defog ON).	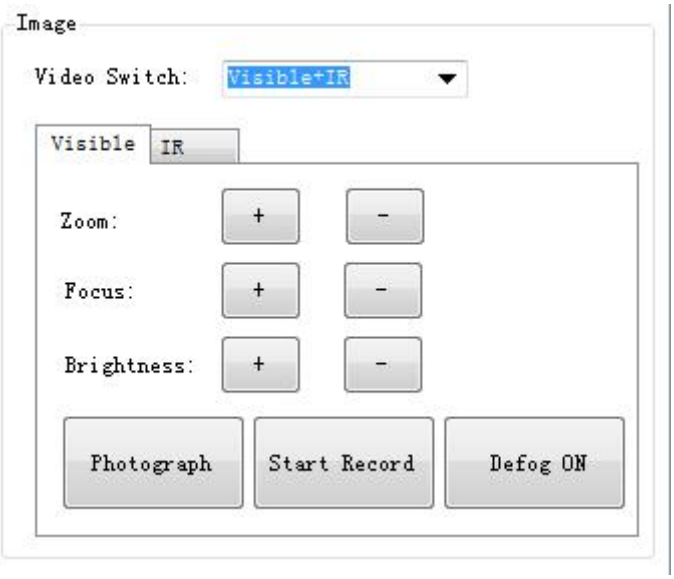
Parameter setting interface is used for debugging, no need to change	
Joystick setting	
1. Connect the joystick device via USB; 2. The sensitivity of the joystick can be adjusted; 3. The function of the joystick: the direction can be reversed in the azimuth and pitch direction; the cursor sensitivity can also be adjusted as needed; 4. Button function: the buttons on the joystick can be set to the corresponding functions, so as to better control the pod through the joystick.	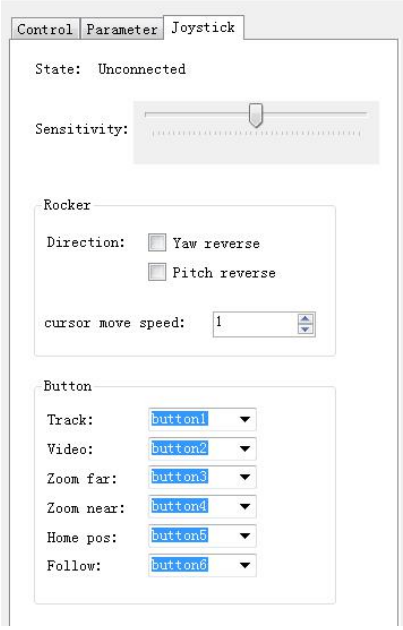

5 Precautions

1) The daily maintenance of the operating personnel is limited to the replacement or inspection of cables, daily cleaning and maintenance, and functional inspection to ensure that the instrument is in good technical condition.

2) Do not open the case without authorization. There are no user-serviceable parts inside the machine. When the system fails, the fault is located by the manufacturer's technology and then processed.

3) If the product is stored for a long time or does not work, it should be stored in a cool and dry environment.

4) Pay attention to the alignment before inserting the user interface connector. Do not pull the cable directly when plugging or unplugging the plug.

5) When the product is shipped, all parameters have been debugged. Unless otherwise specified, please use the recommended configuration parameters.

6) If the product is used on an aircraft, the overall performance is affected by the weight of the aircraft, the power system, the flight control system, and the user settings.The user needs to have certain professional capabilities to make the product meet the performance standards approved by the user before using it in the field.

7) Do not point the camera lens directly at the sun in any state.

8) Disassemble the SD card under the state that the system is powered off.

9) Ensure the lenses are clean and tidy.

10) The first four seconds are the time of automatic calibration gyroscope, please keep the pod stability, or the system will start last data. You can restart the pod or send instruction of calibration gyro for any drift.

11) The control software need to be running at 64-bit system computer.

Document modification record

Version No.	Modified content	Date
V1.0	First file	2019.01.15
V1.1	Added operation instruction of software and modified structure diagram	2019.03.14